Smart Skipper™
By Blue Guard Innovations

Smart Skipper™ Bilge System Kit
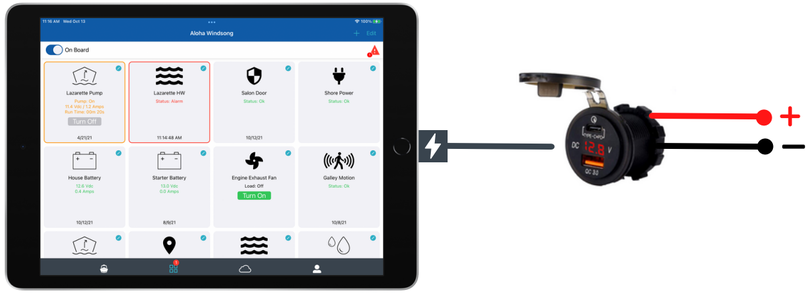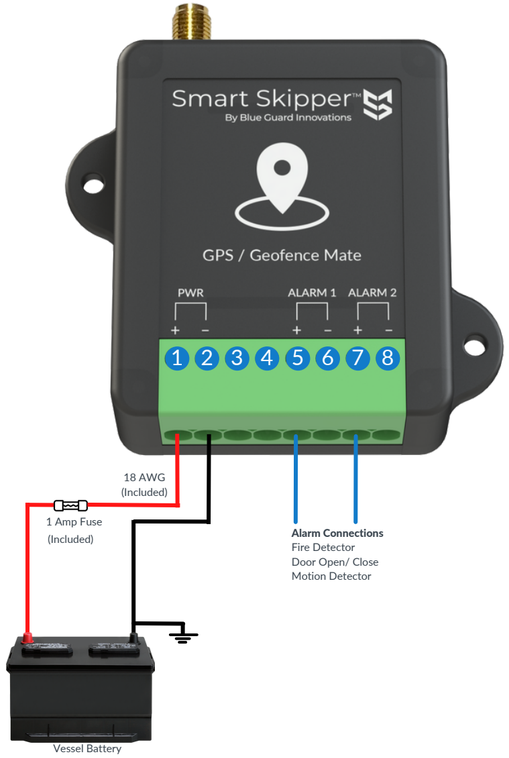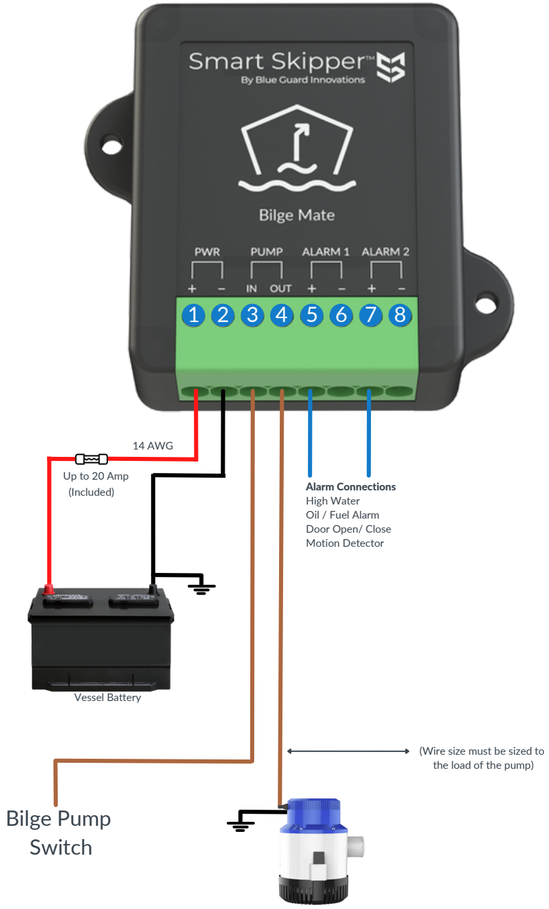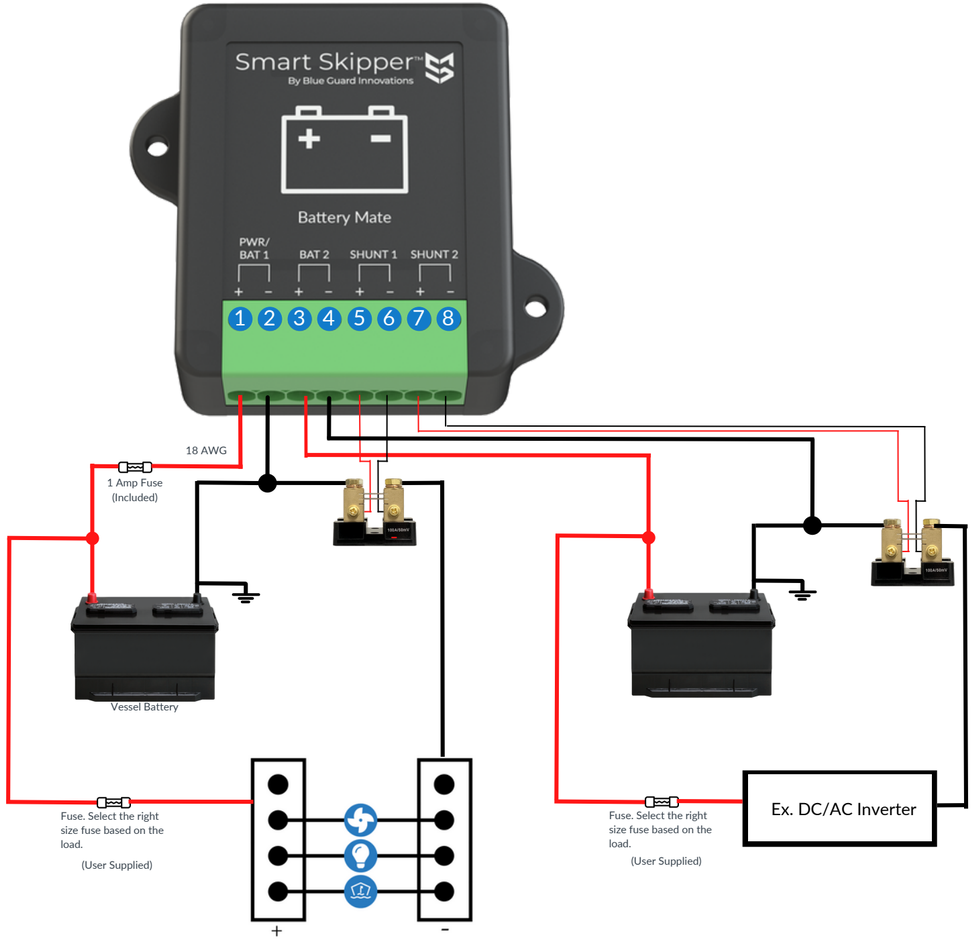
Smart Tablet